Bangladesh Army University of Engineering & Technology
Department of Electrical & Electronic Engineering

Lecture: 22 - 25

Course Code: EEE 1261

Course Title: Electronic Devices and Circuits

Course Teacher: Ferdous Farjana

Designation: Lecturer, Dept. of EEE, BAUET

Contents

- ❖Bipolar Junction Transistors: Common-Base Configuration, Common-Emitter Configuration
- ❖DC Biasing-BJTs: Introduction, Fixed-Bias Configuration, Related math
- ❖BJT AC Analysis: Introduction, Common-Emitter Fixed-Bias Configuration, Related math

Reference Books

- **Electronic Devices and Circuit Theory: Robert L. Boylestad and Louis Nashelsky.**
- Fundamentals of Electric circuits: Charles K. Alexander, Matthew N. O Sadiku.
- Electronic Principles: Albert P. Malvino.
- Micro Electronics Circuits: Adel S. Sedra & Keneth C. Smith: Oxford University Press.
- Operational Amplifiers and Linear Integrated Circuits: Robert F. Coughlin: Prentice Hall of India Private Limited.

3.4 COMMON-BASE CONFIGURATION

The notation and symbols used in conjunction with the transistor in the majority of texts and manuals published today are indicated in Fig. 3.6 for the common-base configuration with *pnp* and *npn* transistors. The common-base terminology is derived from the fact that the base is common to both the input and output sides of the configuration. In addition, the base is usually the terminal closest to, or at, ground potential. Throughout this text all current directions will refer to conventional (hole) flow rather than electron flow. The result is that the arrows in all electronic symbols have a direction defined by this convention. Recall that the arrow in the diode symbol defined the direction of conduction for conventional current. For the transistor:

The arrow in the graphic symbol defines the direction of emitter current (conventional flow) through the device.

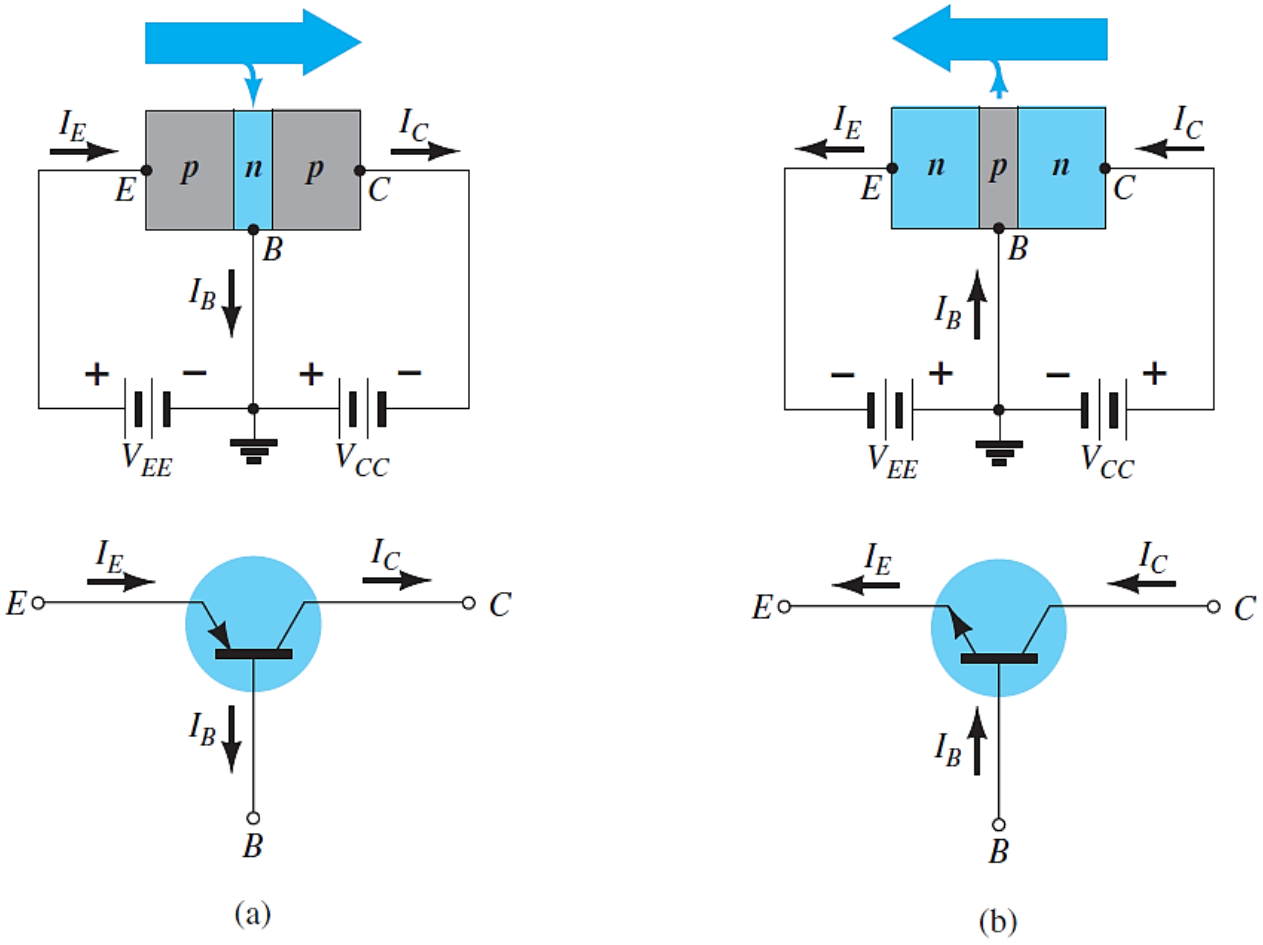

FIG. 3.6: *Notation and symbols used with the common-bas configuration: (a) pnp transistor; (b) npn transistor.*

All the current directions appearing in Fig. 3.6 are the actual directions as defined by the choice of conventional flow. Note in each case that $I_E = I_C + I_B$. Note also that the applied biasing (voltage sources) are such as to establish current in the direction indicated for each branch. That is, compare the direction of I_E to the polarity of V_{EE} for each configuration and the direction of I_C to the polarity of V_{CC}.

To fully describe the behavior of a three-terminal device such as the common-base amplifiers of Fig. 3.6 requires two sets of characteristics—one for the *driving point* or *input* parameters and the other for the *output* side. The input set for the common-base amplifier as shown in Fig. 3.7 relates an input current (I_E) to an input voltage (V_{BE}) for various levels of output voltage (V_{CB}).

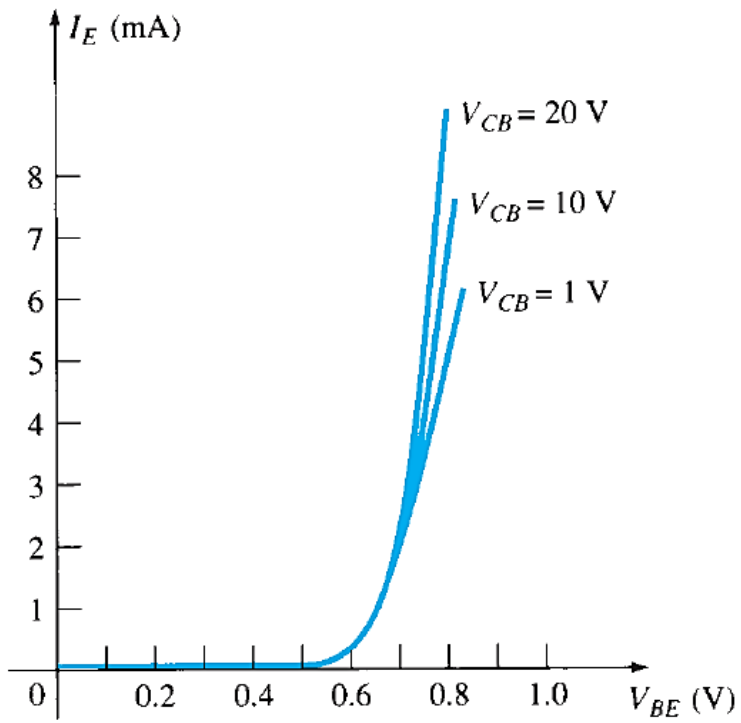

FIG. 3.7
Input or driving point characteristics for a common-base silicon transistor amplifier.

The output set relates an output current (I_C) to an output voltage (V_{CB}) for various levels of input current (I_E) as shown in Fig. 3.8. The output or *collector* set of characteristics has three basic regions of interest, as indicated in Fig. 3.8: the *active*, *cutoff*, and *saturation*

The output set relates an output current (I_C) to an output voltage (V_{CB}) for various levels of input current (I_E) as shown in Fig. 3.8. The output or *collector* set of characteristics has three basic regions of interest, as indicated in Fig. 3.8: the *active*, *cutoff*, and *saturation*

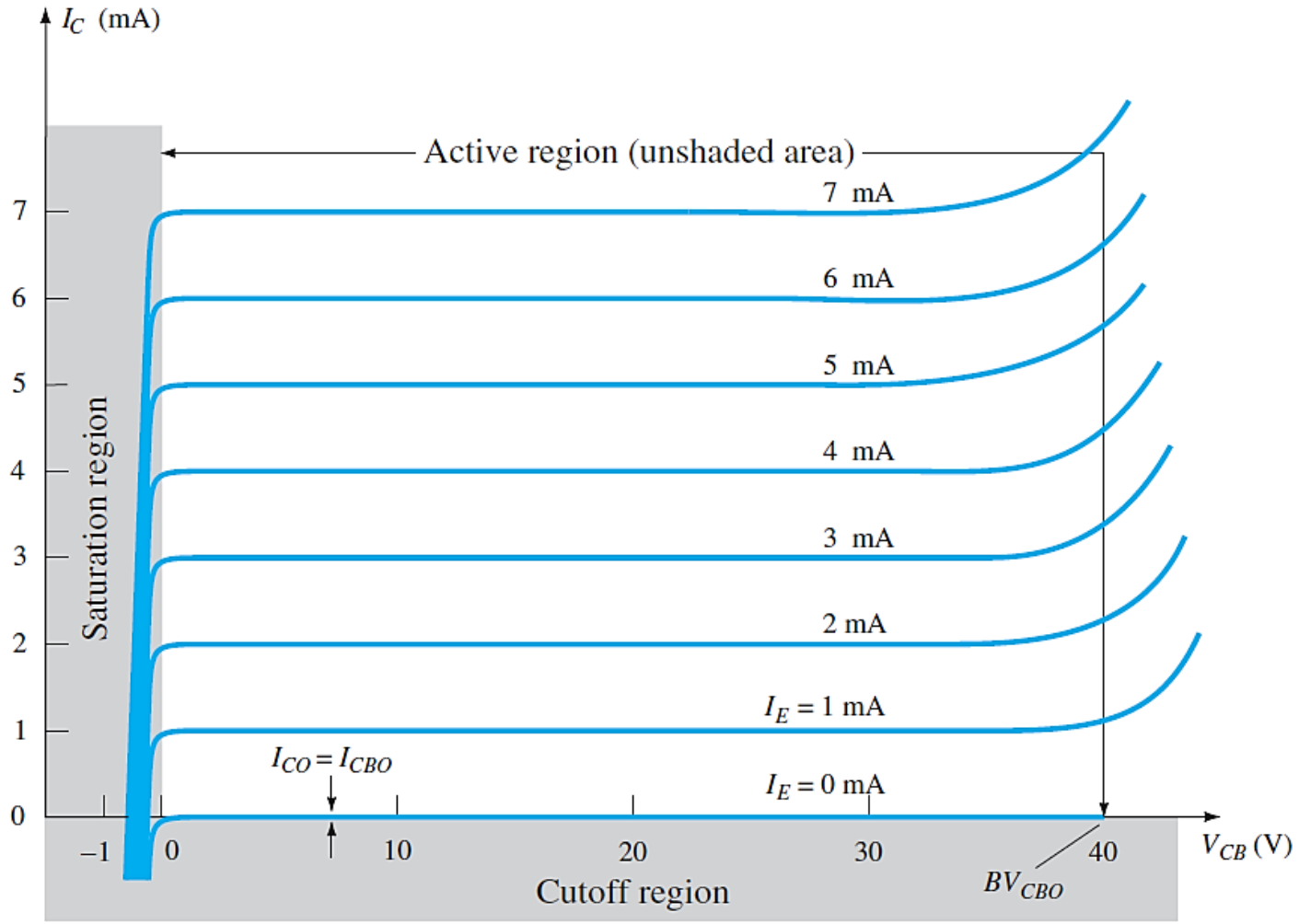

FIG. 3.8
Output or collector characteristics for a common-base transistor amplifier.

regions. The active region is the region normally employed for linear (undistorted) amplifiers. In particular:

In the active region the base–emitter junction is forward-biased, whereas the collector–base junction is reverse-biased.

The active region is defined by the biasing arrangements of Fig. 3.6. At the lower end of the active region the emitter current (I_E) is zero, and the collector current is simply that due to the reverse saturation current I_{CO}, as indicated in Fig. 3.9. The current I_{CO} is so small (microamperes) in magnitude compared to the vertical scale of I_C (milliamperes) that it appears on virtually the same horizontal line as $I_C = 0$. The circuit conditions that exist when $I_E = 0$ for the common-base configuration are shown in Fig. 3.9. The notation most frequently used for I_{CO} on data and specification sheets is, as indicated in Fig. 3.9, I_{CBO} (the collector-to-base current with the emitter leg open). Because of improved construction techniques, the level of I_{CBO} for general-purpose transistors in the low- and mid-power ranges is usually so low that its effect can be ignored. However, for higher power units I_{CBO} will still appear in the microampere range. In addition, keep in mind that I_{CBO}, like I_s, for the diode (both reverse leakage currents) is temperature sensitive. At higher temperatures the effect of I_{CBO} may become an important factor since it increases so rapidly with temperature.

Note in Fig. 3.8 that as the emitter current increases above zero, the collector current increases to a magnitude essentially equal to that of the emitter current as determined by the basic transistor-current relations. Note also the almost negligible effect of V_{CB} on the collector current for the active region. The curves clearly indicate that *a first approximation to the relationship between I_E and I_C in the active region is given by*

$$I_C \cong I_E \tag{3.3}$$

As inferred by its name, the cutoff region is defined as that region where the collector current is 0 A, as revealed on Fig. 3.8. In addition:

In the cutoff region the base–emitter and collector–base junctions of a transistor are both reverse-biased.

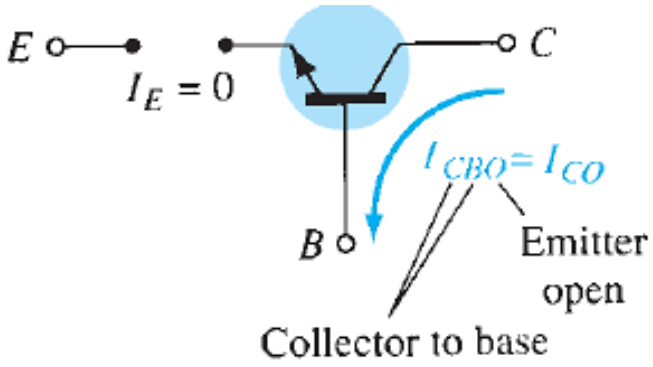

FIG. 3.9
Reverse saturation current.

The saturation region is defined as that region of the characteristics to the left of $V_{CB} = 0$ V. The horizontal scale in this region was expanded to clearly show the dramatic change in characteristics in this region. Note the exponential increase in collector current as the voltage V_{CB} increases toward 0 V.

In the saturation region the base–emitter and collector–base junctions are forward-biased.

The input characteristics of Fig. 3.7 reveal that for fixed values of collector voltage (V_{CB}), as the base-to-emitter voltage increases, the emitter current increases in a manner that closely resembles the diode characteristics. In fact, increasing levels of V_{CB} have such a small effect on the characteristics that as a first approximation the change due to changes in V_{CB} can be ignored and the characteristics drawn as shown in Fig. 3.10a. If we then apply the piecewise-linear approach, the characteristics of Fig. 3.10b result. Taking it a step further and ignoring the slope of the curve and therefore the resistance associated with the forward-biased junction results in the characteristics of Fig. 3.10c. For the analysis to follow in this book the equivalent model of Fig. 3.10c will be employed for all dc analysis of transistor networks. That is, once a transistor is in the "on" state, the base-to-emitter voltage will be assumed to be the following:

$$\boxed{V_{BE} \cong 0.7 \text{ V}} \tag{3.4}$$

In other words, the effect of variations due to V_{CB} and the slope of the input characteristics will be ignored as we strive to analyze transistor networks in a manner that will provide a good approximation to the actual response without getting too involved with parameter variations of less importance.

It is important to fully appreciate the statement made by the characteristics of Fig. 3.10c. They specify that with the transistor in the "on" or active state the voltage from base to emitter will be 0.7 V at *any* level of emitter current as controlled by the external network. In fact, at the first encounter of any transistor configuration in the dc mode, one can now immediately specify that the voltage from base to emitter is 0.7 V if the device is in the active region—a very important conclusion for the dc analysis to follow.

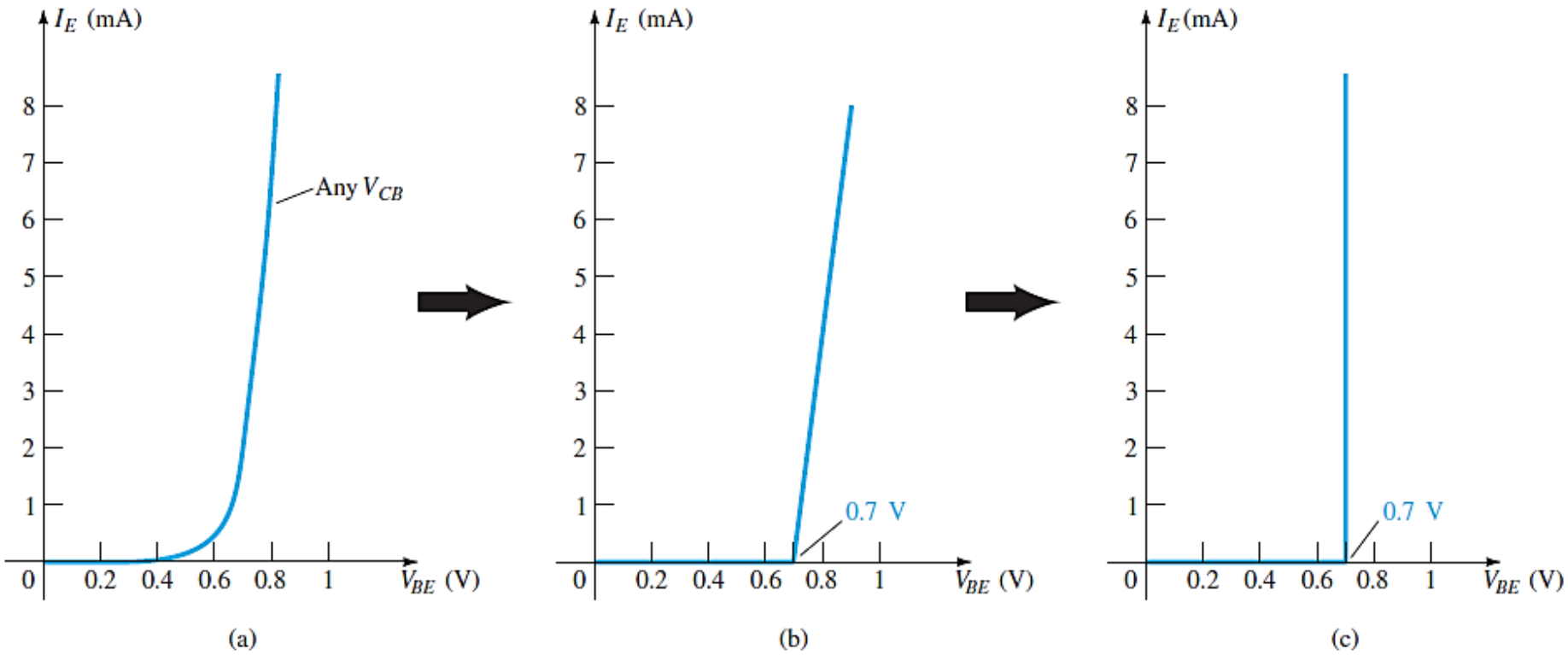

FIG. 3.10

Developing the equivalent model to be employed for the base-to-emitter region of an amplifier in the dc mode.

Alpha (α)

DC Mode In the dc mode the levels of I_C and I_E due to the majority carriers are related by a quantity called *alpha* and defined by the following equation:

$$\alpha_{dc} = \frac{I_C}{I_E} \tag{3.5}$$

where I_C and I_E are the levels of current at the point of operation. Even though the characteristics of Fig. 3.8 would suggest that $\alpha = 1$, for practical devices alpha typically extends from 0.90 to 0.998, with most values approaching the high end of the range. Since alpha is defined solely for the majority carriers, Eq. (3.2) becomes

$$I_C = \alpha I_E + I_{CBO} \tag{3.6}$$

For the characteristics of Fig. 3.8 when $I_E = 0$ mA, I_C is therefore equal to I_{CBO}, but as mentioned earlier, the level of I_{CBO} is usually so small that it is virtually undetectable on the graph of Fig. 3.8. In other words, when $I_E = 0$ mA on Fig. 3.8, I_C also appears to be 0 mA for the range of V_{CB} values.

3.5 COMMON-EMITTER CONFIGURATION

The most frequently encountered transistor configuration appears in Fig. 3.12 for the *pnp* and *npn* transistors. It is called the *common-emitter configuration* because the emitter is common to both the input and output terminals (in this case common to both the base and collector terminals). Two sets of characteristics are again necessary to describe fully the behavior of the common-emitter configuration: one for the *input* or *base–emitter* circuit and one for the *output* or *collector–emitter* circuit. Both are shown in Fig. 3.13.

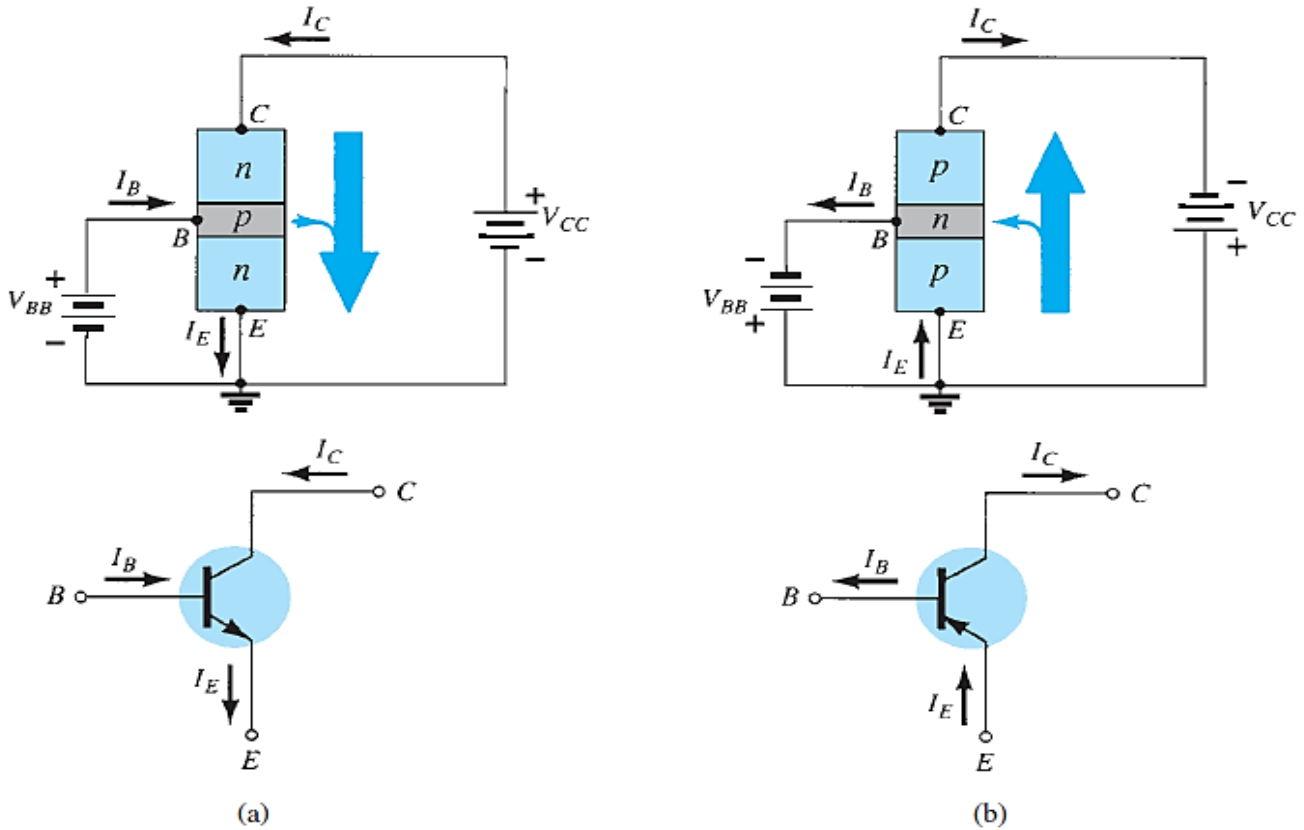

FIG. 3.12
Notation and symbols used with the common-emitter configuration: (a) npn transistor; (b) pnp transistor.

Beta (β)

DC Mode In the dc mode the levels of I_C and I_B are related by a quantity called *beta* and defined by the following equation:

$$\boxed{\beta_{dc} = \frac{I_C}{I_B}} \tag{3.10}$$

where I_C and I_B are determined at a particular operating point on the characteristics. For practical devices the level of β typically ranges from about 50 to over 400, with most in the midrange. As for α, the parameter β reveals the relative magnitude of one current with respect to the other. For a device with a β of 200, the collector current is 200 times the magnitude of the base current.

On specification sheets β_{dc} is usually included as h_{FE} with the italic letter h derived from an ac *h*ybrid equivalent circuit to be introduced in Chapter 5. The subscript FE is derived from *f*orward-current amplification and common-*e*mitter configuration, respectively.

Chapter 4: DC Biasing-BJTs

Electronic Devices and Circuit Theory – Robert L. Boylestad and Louis Nashelsky

4.1 INTRODUCTION

The analysis or design of a transistor amplifier requires a knowledge of both the dc and the ac response of the system. Too often it is assumed that the transistor is a magical device that can raise the level of the applied ac input without the assistance of an external energy source. In actuality,

any increase in ac voltage, current, or power is the result of a transfer of energy from the applied dc supplies.

The analysis or design of any electronic amplifier therefore has two components: a dc and an ac portion. Fortunately, the superposition theorem is applicable, and the investigation of the dc conditions can be totally separated from the ac response. However, one must keep in mind that during the design or synthesis stage the choice of parameters for the required dc levels will affect the ac response, and vice versa.

The dc level of operation of a transistor is controlled by a number of factors, including the range of possible operating points on the device characteristics. In Section 4.2 we specify the range for the bipolar junction transistor (BJT) amplifier. Once the desired dc current and voltage levels have been defined, a network must be constructed that will establish the desired operating point. A number of these networks are analyzed in this chapter. Each design will also determine the stability of the system, that is, how sensitive the system is to temperature variations, another topic to be investigated in a later section of this chapter.

Although a number of networks are analyzed in this chapter, there is an underlying similarity in the analysis of each configuration due to the recurring use of the following important basic relationships for a transistor:

$$\boxed{V_{BE} \cong 0.7\ \text{V}} \tag{4.1}$$

$$\boxed{I_E = (\beta + 1)I_B \cong I_C} \tag{4.2}$$

$$\boxed{I_C = \beta I_B} \tag{4.3}$$

In fact, once the analysis of the first few networks is clearly understood, the path toward the solution of the networks to follow will begin to become quite apparent. In most instances the base current I_B is the first quantity to be determined. Once I_B is known, the relationships of Eqs. (4.1) through (4.3) can be applied to find the remaining quantities of interest. The similarities in analysis will be immediately obvious as we progress through the chapter. The equations for I_B are so similar for a number of configurations that one equation can be derived from another simply by dropping or adding a term or two. The primary function of this chapter is to develop a level of familiarity with the BJT transistor that would permit a dc analysis of any system that might employ the BJT amplifier.

4.3 FIXED-BIAS CONFIGURATION

The fixed-bias circuit of Fig. 4.2 is the simplest transistor dc bias configuration. Even though the network employs an *npn* transistor, the equations and calculations apply equally well to a *pnp* transistor configuration merely by changing all current directions and voltage polarities. The current directions of Fig. 4.2 are the *actual* current directions, and the voltages are defined by the standard double-subscript notation. For the dc analysis the network can be isolated from the indicated ac levels by replacing the capacitors with an open-circuit equivalent because the reactance of a capacitor is a function of the applied frequency. For dc, $f = 0$ Hz, and $X_C = {}^1\!/_2\pi fC = {}^1\!/_2\pi(0)C = \infty\,\Omega$. In addition, the dc supply V_{CC} can be separated into two supplies (for analysis purposes only) as shown in Fig. 4.3 to permit a separation of input and output circuits. It also reduces the linkage between the two to the base current I_B. The separation is certainly valid, as we note in Fig. 4.3 that V_{CC} is connected directly to R_B and R_C just as in Fig. 4.2.

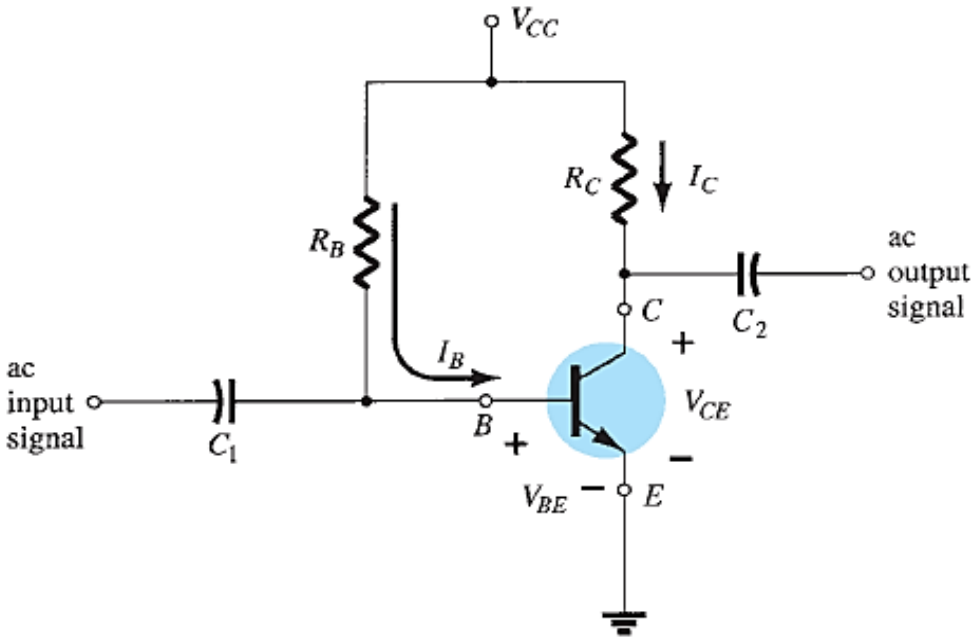

FIG. 4.2
Fixed-bias circuit.

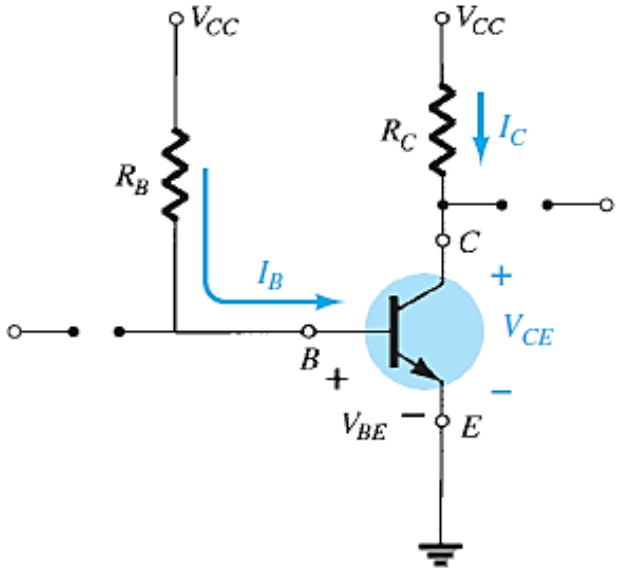

FIG. 4.3
DC equivalent of Fig. 4.2.

Forward Bias of Base–Emitter

Consider first the base–emitter circuit loop of Fig. 4.4. Writing Kirchhoff's voltage equation in the clockwise direction for the loop, we obtain

$$+V_{CC} - I_B R_B - V_{BE} = 0$$

Note the polarity of the voltage drop across R_B as established by the indicated direction of I_B. Solving the equation for the current I_B results in the following:

$$I_B = \frac{V_{CC} - V_{BE}}{R_B} \tag{4.4}$$

Equation (4.4) is certainly not a difficult one to remember if one simply keeps in mind that the base current is the current through R_B and by Ohm's law that current is the voltage across R_B divided by the resistance R_B. The voltage across R_B is the applied voltage V_{CC} at one end less the drop across the base-to-emitter junction (V_{BE}). In addition, because the supply voltage V_{CC} and the base–emitter voltage V_{BE} are constants, the selection of a base resistor R_B sets the level of base current for the operating point.

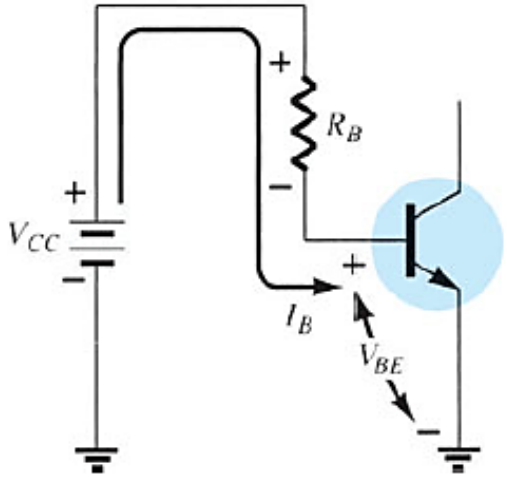

FIG. 4.4
Base–emitter loop.

Collector–Emitter Loop

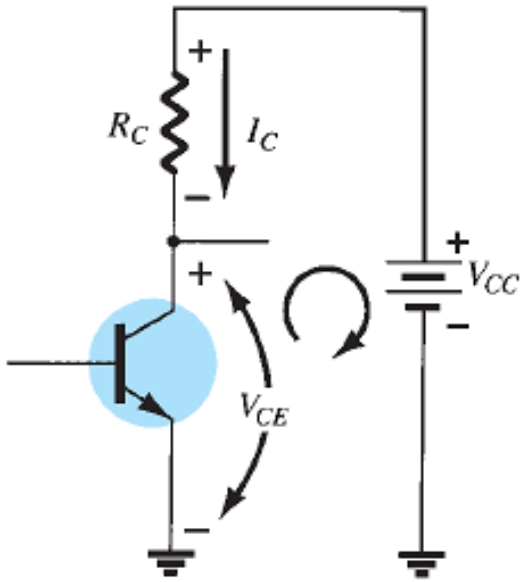

FIG. 4.5
Collector–emitter loop.

The collector–emitter section of the network appears in Fig. 4.5 with the indicated direction of current I_C and the resulting polarity across R_C. The magnitude of the collector current is related directly to I_B through

$$\boxed{I_C = \beta I_B} \tag{4.5}$$

It is interesting to note that because the base current is controlled by the level of R_B and I_C is related to I_B by a constant β, the magnitude of I_C is not a function of the resistance R_C. Changing R_C to any level will not affect the level of I_B or I_C as long as we remain in the active region of the device. However, as we shall see, the level of R_C will determine the magnitude of V_{CE}, which is an important parameter.

Applying Kirchhoff's voltage law in the clockwise direction around the indicated closed loop of Fig. 4.5 results in the following:

$$V_{CE} + I_C R_C - V_{CC} = 0$$

and

$$\boxed{V_{CE} = V_{CC} - I_C R_C} \tag{4.6}$$

which states that the voltage across the collector–emitter region of a transistor in the fixed-bias configuration is the supply voltage less the drop across R_C.

As a brief review of single- and double-subscript notation recall that

$$\boxed{V_{CE} = V_C - V_E} \tag{4.7}$$

where V_{CE} is the voltage from collector to emitter and V_C and V_E are the voltages from collector and emitter to ground, respectively. *In this case,* since $V_E = 0$ V, we have

$$\boxed{V_{CE} = V_C} \tag{4.8}$$

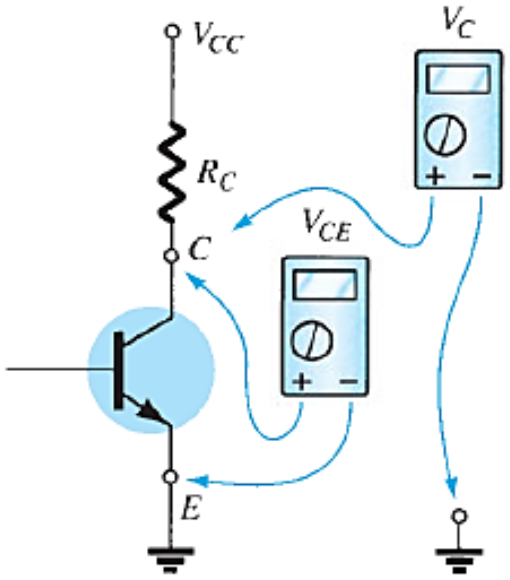

FIG. 4.6
Measuring V_{CE} and V_C.

In addition, because

$$V_{BE} = V_B - V_E \tag{4.9}$$

and $V_E = 0$ V, then

$$V_{BE} = V_B \tag{4.10}$$

Keep in mind that voltage levels such as V_{CE} are determined by placing the positive lead (normally red) of the voltmeter at the collector terminal with the negative lead (normally black) at the emitter terminal as shown in Fig. 4.6. V_C is the voltage from collector to ground and is measured as shown in the same figure. In this case the two readings are identical, but in the networks to follow the two can be quite different. Clearly understanding the difference between the two measurements can prove to be quite important in the troubleshooting of transistor networks.

EXAMPLE 4.1 Determine the following for the fixed-bias configuration of Fig. 4.7.

a. I_{B_Q} and I_{C_Q}.
b. V_{CE_Q}.
c. V_B and V_C.
d. V_{BC}.

Solution:

a. Eq. (4.4): $$I_{B_Q} = \frac{V_{CC} - V_{BE}}{R_B} = \frac{12\text{ V} - 0.7\text{ V}}{240\text{ k}\Omega} = \mathbf{47.08\ \mu A}$$

Eq. (4.5): $$I_{C_Q} = \beta I_{BQ} = (50)(47.08\ \mu\text{A}) = \mathbf{2.35\ mA}$$

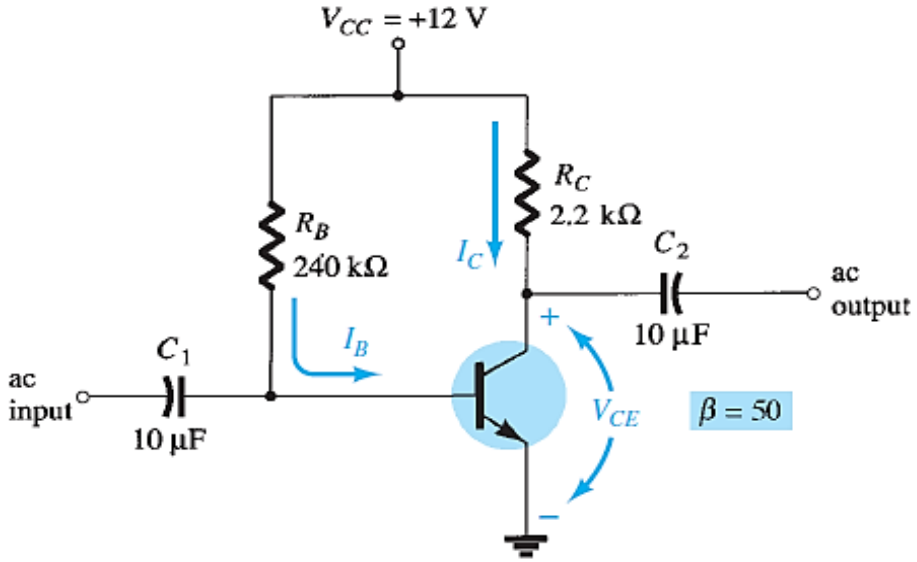

FIG. 4.7
DC fixed-bias circuit for Example 4.1.

b. Eq. (4.6):
$$V_{CE_Q} = V_{CC} - I_C R_C$$
$$= 12\text{ V} - (2.35\text{ mA})(2.2\text{ k}\Omega)$$
$$= \mathbf{6.83\text{ V}}$$

c. $V_B = V_{BE} = \mathbf{0.7\text{ V}}$
$V_C = V_{CE} = \mathbf{6.83\text{ V}}$

d. Using double-subscript notation yields
$$V_{BC} = V_B - V_C = 0.7\text{ V} - 6.83\text{ V}$$
$$= \mathbf{-6.13\text{ V}}$$
with the negative sign revealing that the junction is reversed-biased, as it should be for linear amplification.

Chapter 5: BJT AC Analysis

Electronic Devices and Circuit Theory – Robert L. Boylestad and Louis Nashelsky

5.1 INTRODUCTION

The basic construction, appearance, and characteristics of the transistor were introduced in Chapter 3. The dc biasing of the device was then examined in detail in Chapter 4. We now begin to examine the ac response of the BJT amplifier by reviewing the *models* most frequently used to represent the transistor in the sinusoidal ac domain.

One of our first concerns in the sinusoidal ac analysis of transistor networks is the magnitude of the input signal. It will determine whether *small-signal* or *large-signal* techniques should be applied. There is no set dividing line between the two, but the application—and the magnitude of the variables of interest relative to the scales of the device characteristics—will usually make it quite clear which method is appropriate. The small-signal technique is introduced in this chapter, and large-signal applications are examined in Chapter 12.

There are three models commonly used in the small-signal ac analysis of transistor networks: the r_e model, the hybrid π model, and the hybrid equivalent model. This chapter introduces all three but emphasizes the r_e model.

5.5 COMMON-EMITTER FIXED-BIAS CONFIGURATION

The transistor models just introduced will now be used to perform a small-signal ac analysis of a number of standard transistor network configurations. The networks analyzed represent the majority of those appearing in practice. Modifications of the standard configurations will be relatively easy to examine once the content of this chapter is reviewed and understood. For each configuration, the effect of an output impedance is examined for completeness.

The computer analysis section includes a brief description of the transistor model employed in the PSpice and Multisim software packages. It demonstrates the range and depth of the available computer analysis systems and how relatively easy it is to enter a complex network and print out the desired results. The first configuration to be analyzed in detail is the common-emitter *fixed-bias* network of Fig. 5.20. Note that the input signal V_i is applied to the base of the transistor, whereas the output V_o is off the collector. In addition, recognize that the input current I_i is not the base current, but the source current, and the output current I_o is the collector current. The small-signal ac analysis begins by removing the dc effects of V_{CC} and replacing the dc blocking capacitors C_1 and C_2 by short-circuit equivalents, resulting in the network of Fig. 5.21.

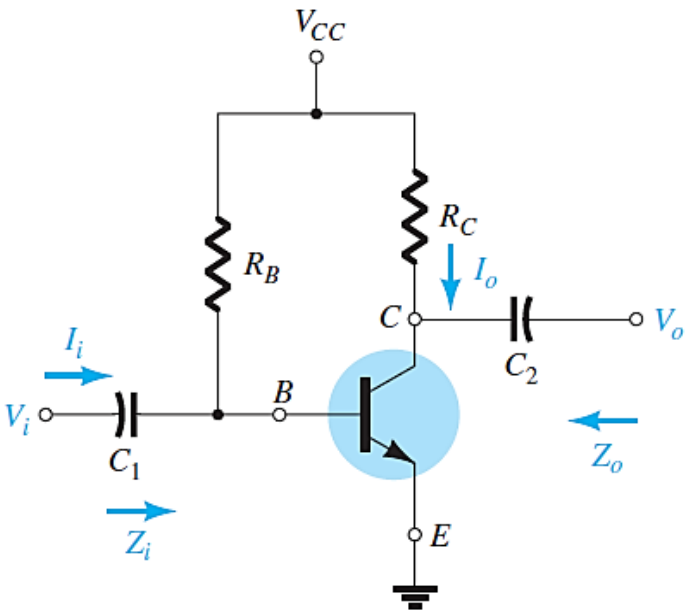

FIG. 5.20
Common-emitter fixed-bias configuration.

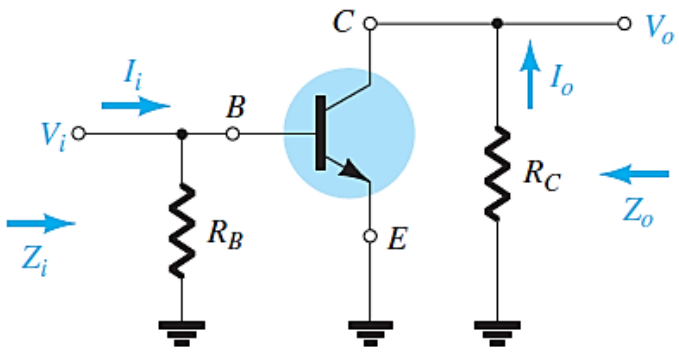

FIG. 5.21
Network of Fig. 5.20 following the removal of the effects of V_{CC}, C_1, and C_2.

Note in Fig. 5.21 that the common ground of the dc supply and the transistor emitter terminal permits the relocation of R_B and R_C in parallel with the input and output sections of the transistor, respectively. In addition, note the placement of the important network parameters Z_i, Z_o, I_i, and I_o on the redrawn network. Substituting the r_e model for the common-emitter configuration of Fig. 5.21 results in the network of Fig. 5.22.

The next step is to determine β, r_e, and r_o. The magnitude of β is typically obtained from a specification sheet or by direct measurement using a curve tracer or transistor

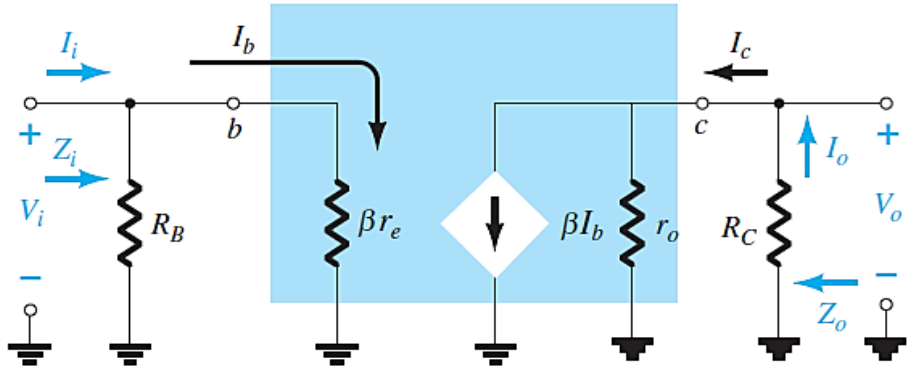

FIG. 5.22
Substituting the r_e model into the network of Fig. 5.21.

testing instrument. The value of r_e must be determined from a dc analysis of the system, and the magnitude of r_o is typically obtained from the specification sheet or characteristics. Assuming that β, r_e, and r_o have been determined will result in the following equations for the important two-port characteristics of the system.

Z_i Figure 5.22 clearly shows that

$$\boxed{Z_i = R_B \| \beta r_e} \quad \text{ohms} \tag{5.5}$$

For the majority of situations R_B is greater than βr_e by more than a factor of 10 (recall from the analysis of parallel elements that the total resistance of two parallel resistors is always less than the smallest and very close to the smallest if one is much larger than the other), permitting the following approximation:

$$\boxed{Z_i \cong \beta r_e}_{R_B \geq 10\beta r_e} \quad \text{ohms} \tag{5.6}$$

Z_o Recall that the output impedance of any system is defined as the impedance Z_o determined when $V_i = 0$. For Fig. 5.22, when $V_i = 0$, $I_i = I_b = 0$, resulting in an open-circuit equivalence for the current source. The result is the configuration of Fig. 5.23. We have

$$\boxed{Z_o = R_C \| r_o} \quad \text{ohms} \tag{5.7}$$

If $r_o \geq 10R_C$, the approximation $R_C \| r_o \cong R_C$ is frequently applied, and

$$\boxed{Z_o \cong R_C}_{\,r_o \geq 10R_C} \tag{5.8}$$

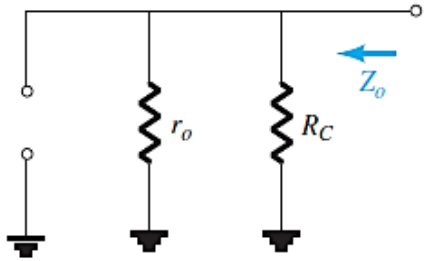

FIG. 5.23
Determining Z_o for the network of Fig. 5.22.

A_v The resistors r_o and R_C are in parallel, and

$$V_o = -\beta I_b (R_C \| r_o)$$

but

$$I_b = \frac{V_i}{\beta r_e}$$

so that

$$V_o = -\beta \left(\frac{V_i}{\beta r_e} \right) (R_C \| r_o)$$

and

$$\boxed{A_v = \frac{V_o}{V_i} = -\frac{(R_C \| r_o)}{r_e}} \tag{5.9}$$

If $r_o \geq 10R_C$, so that the effect of r_o can be ignored,

$$\boxed{A_v = -\frac{R_C}{r_e}}_{\,r_o \geq 10R_C} \tag{5.10}$$

Note the explicit absence of β in Eqs. (5.9) and (5.10), although we recognize that β must be utilized to determine r_e.

Phase Relationship The negative sign in the resulting equation for A_v reveals that a 180° phase shift occurs between the input and output signals, as shown in Fig. 5.24. The is a result of the fact that βI_b establishes a current through R_C that will result in a voltage across R_C, the opposite of that defined by V_o.

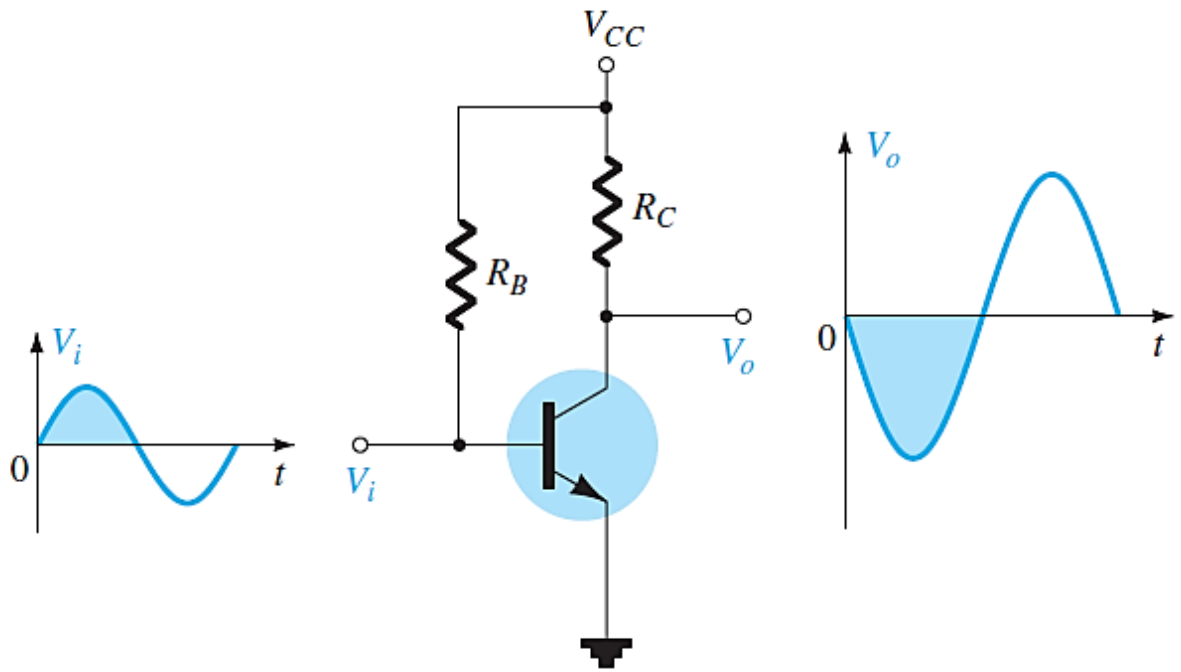

FIG. 5.24
Demonstrating the 180° phase shift between input and output waveforms.

EXAMPLE 5.1 For the network of Fig. 5.25:

a. Determine r_e.
b. Find Z_i (with $r_o = \infty\,\Omega$).
c. Calculate Z_o (with $r_o = \infty\,\Omega$).
d. Determine A_v (with $r_o = \infty\,\Omega$).
e. Repeat parts (c) and (d) including $r_o = 50\text{ k}\Omega$ in all calculations and compare results.

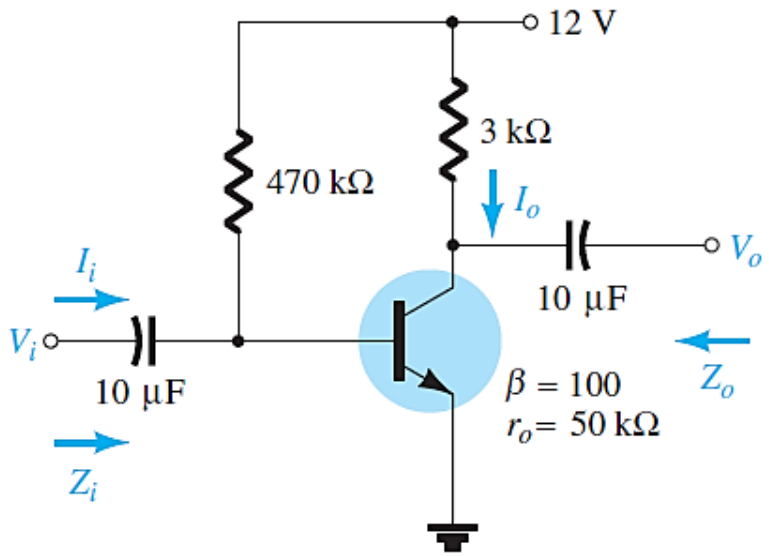

FIG. 5.25
Example 5.1.

Solution:

a. DC analysis:

$$I_B = \frac{V_{CC} - V_{BE}}{R_B} = \frac{12\text{ V} - 0.7\text{ V}}{470\text{ k}\Omega} = 24.04\ \mu\text{A}$$

$$I_E = (\beta + 1)I_B = (101)(24.04\ \mu\text{A}) = 2.428\text{ mA}$$

$$r_e = \frac{26\text{ mV}}{I_E} = \frac{26\text{ mV}}{2.428\text{ mA}} = \mathbf{10.71\ \Omega}$$

b. $\beta r_e = (100)(10.71\ \Omega) = 1.071\text{ k}\Omega$

$$Z_i = R_B \| \beta r_e = 470\text{ k}\Omega \| 1.071\text{ k}\Omega = \mathbf{1.07\ k\Omega}$$

c. $Z_o = R_C = \mathbf{3\ k\Omega}$

d. $A_v = -\dfrac{R_C}{r_e} = -\dfrac{3\text{ k}\Omega}{10.71\ \Omega} = \mathbf{-280.11}$

e. $Z_o = r_o \| R_C = 50\text{ k}\Omega \| 3\text{ k}\Omega = \mathbf{2.83\ k\Omega}$ vs. $3\text{ k}\Omega$

$$A_v = -\frac{r_o \| R_C}{r_e} = \frac{2.83\text{ k}\Omega}{10.71\ \Omega} = \mathbf{-264.24} \text{ vs. } -280.11$$

THANK YOU